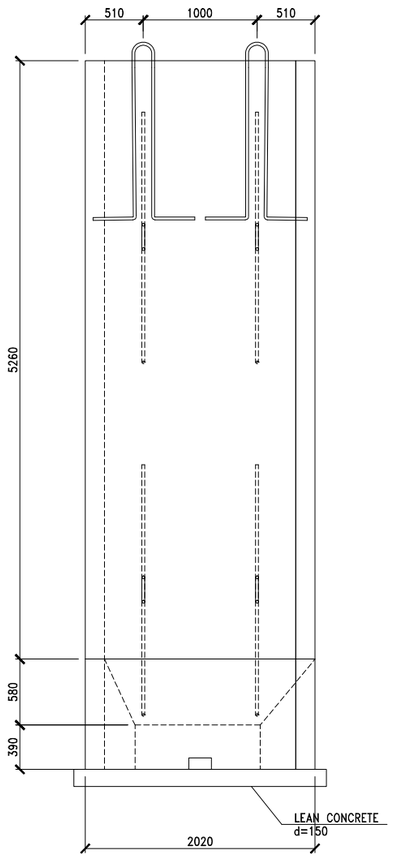

2 FRAMING SECTION A
SD011 SD011 SCALE: 1:25

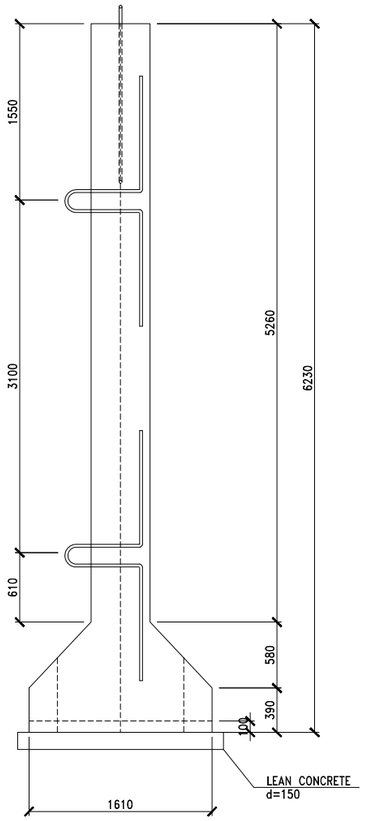

2 FRAMING SECTION B
SD011 SD011 SCALE: 1:25

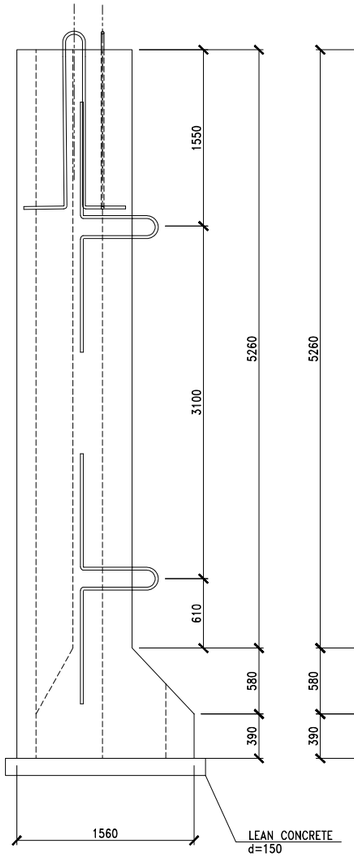

5 FRAMING SECTION C
SD011 SD011 SCALE: 1:25

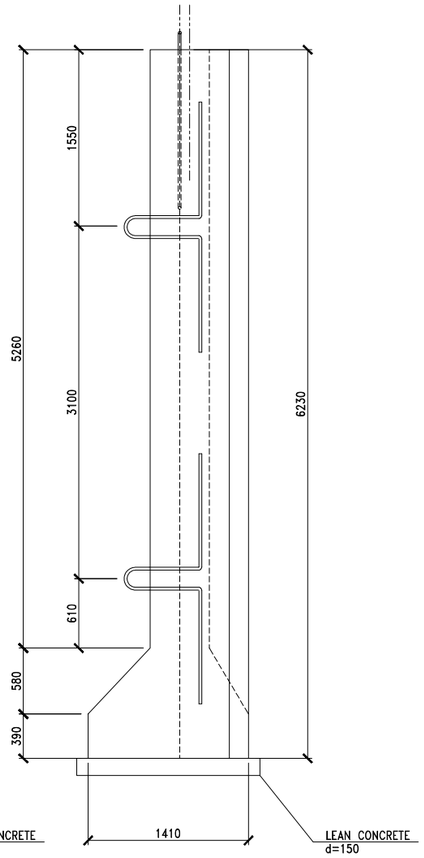

6 FRAMING SECTION D
SD011 SD011 SCALE: 1:25

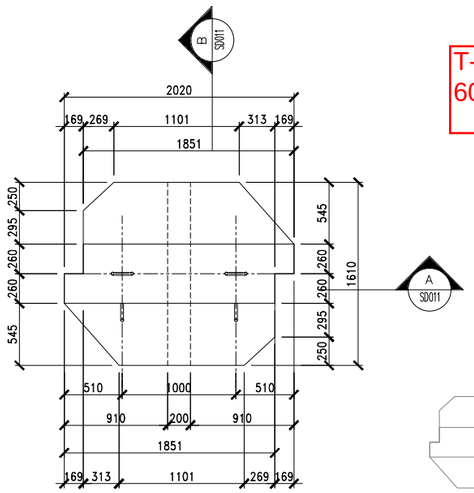

1 T-WALL TYPE 1 – FRAMING PLAN
SD011 SD011 SCALE: 1:25

T-Wall Barrier Type-1
60 units

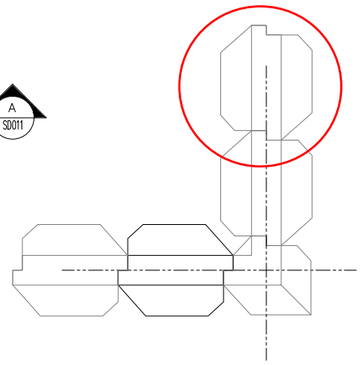

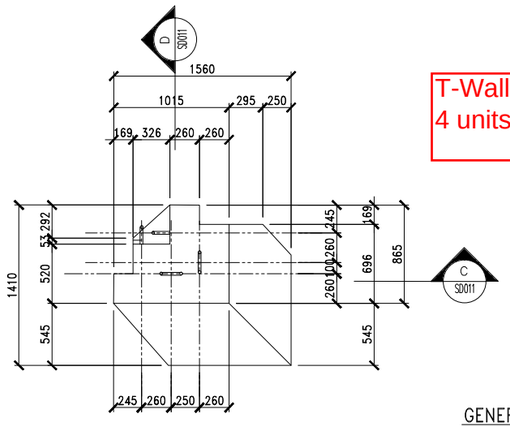

4 T-WALL TYPE 2 – FRAMING PLAN
SD011 SD011 SCALE: 1:25

T-Wall Barrier Type-2
4 units

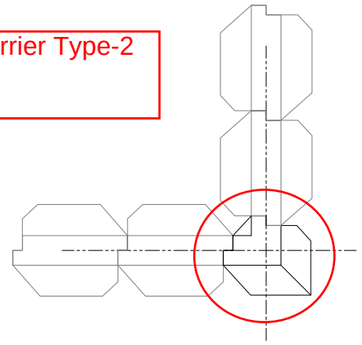

GENERAL NOTES

(UNLESS NOTED OTHERWISE)

1. DIMENSIONS ARE (mm)
2. CONCRETE COVER ACCORDING TO THE ENCLOSED TABLE U.N.O.
3. THE COMPRESSIVE STRENGTH OF CONCRETE IS 25 MPa AFTER 28 DAYS
4. THE YIELD STRENGTH OF STEEL IS 420 MPa
5. CHAMFER ALL EXPOSED CORNERS 25x25mm

CONCRETE COVER ACC. TO LOCATION OF BARS	MIN. COVER (mm)
T-WALLS	40

0 500 1000 2500
1:25

United States Department of State
Office of Overseas Buildings Operations
Washington, D.C.

U.S. EMBASSY BAGHDAD

BAGHDAD, IRAQ

GENERAL NOTES

KEYNOTES

Rev Number	Description	Date
–	–	–

Revisions

Release For Construction:

Drawing Title
T-WALLS
FRAMING PLAN & SECTIONS

Project Number	Drawing Scale	Phase
–	1:25	☒ 100% ☐ IFC ☐ OTHER:
CADD File Name	CADD Plot Scale	
–	1:1	

Date	18-07-25
Drawn By	E.DZABIC
Checked By	M.CIL
Project No.:	XXXXX
Sheet Number	SD-011
Classification	SENSITIVE BUT UNCLASSIFIED

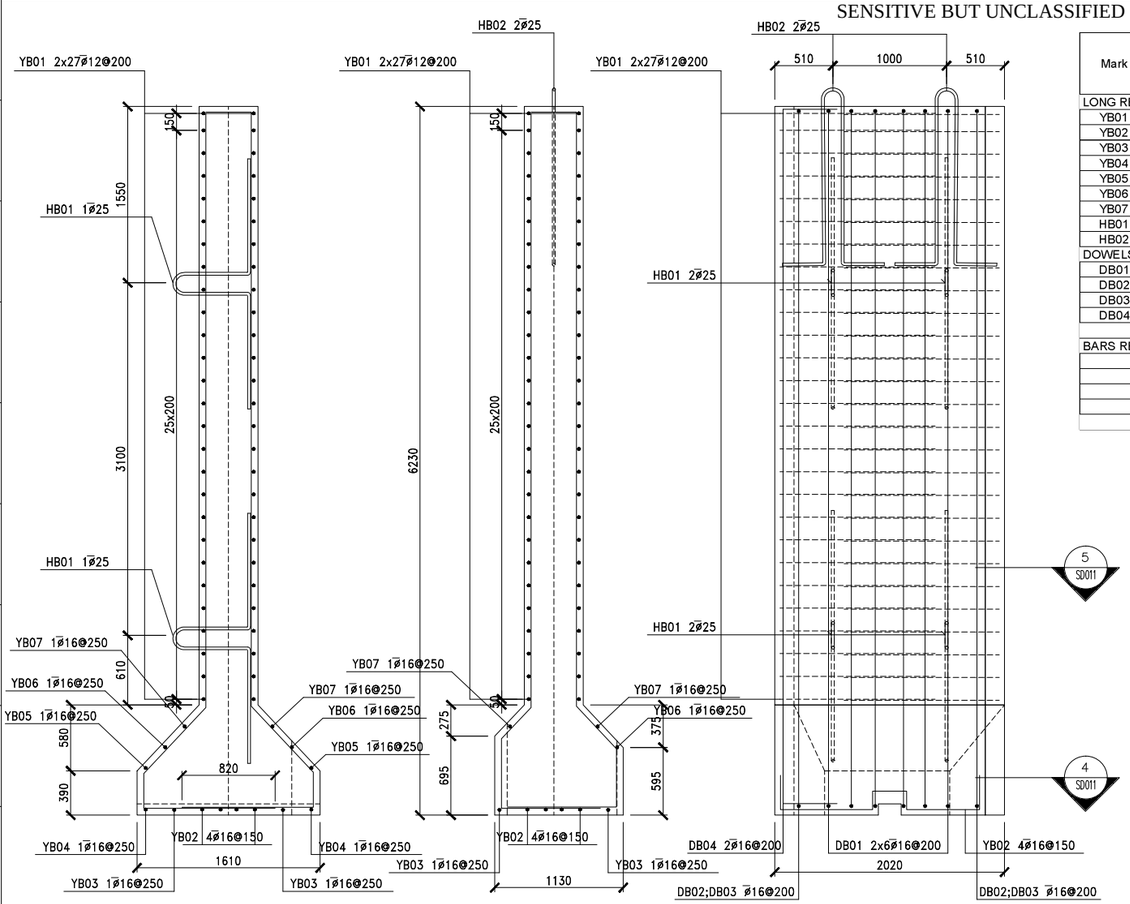

SECTION 2–2 SECTION 3–3 SECTION 1–1

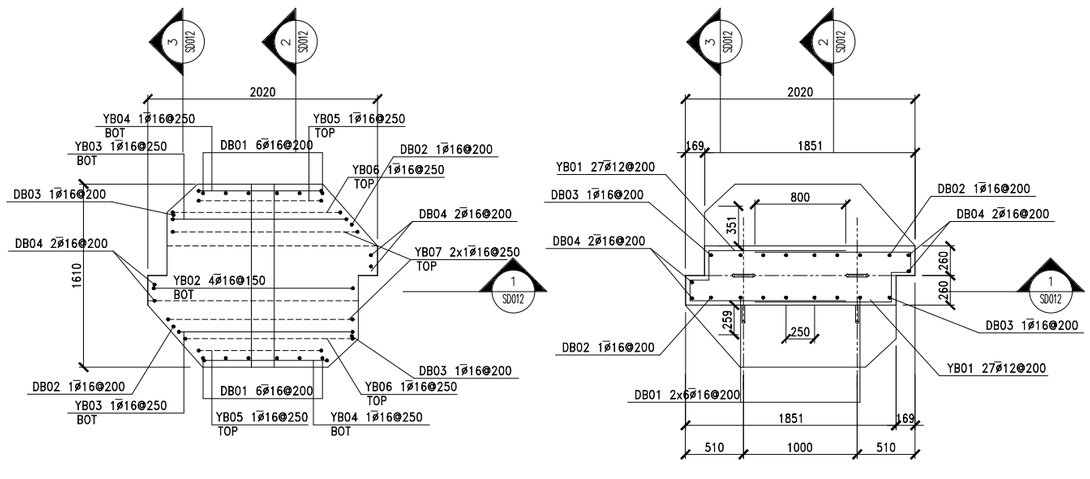

1 SD012 T–WALL TYPE 1 – REINFORCEMENT PLANS

SCALE: 1:25

Mark	Bar Size (mm)	Spacing (mm)	Type	Mark a	b	c	d	e	Length (mm)	Weight (kg/m)	Quantity (no)	Total Weight (kg)
LONG REINFORCEMENT												
YB01	12	200	SEE DWG	3140	-	-	-	-	3140	0,888	54	150,54
YB02	16	150	SEE DWG	2330	-	-	-	-	2330	1,578	4	14,71
YB03	16	250	SEE DWG	2110	-	-	-	-	2110	1,578	2	6,66
YB04	16	250	SEE DWG	1810	-	-	-	-	1810	1,578	2	5,71
YB05	16	250	C	300	1070	300	-	-	1670	1,578	2	5,27
YB06	16	250	C	300	1470	300	-	-	2070	1,578	2	6,53
YB07	16	250	C	300	1620	300	-	-	2220	1,578	2	7,01
HB01	25	N/A	SEE DWG	3400	-	-	-	-	3400	3,853	4	52,41
HB02	25	N/A	SEE DWG	3800	-	-	-	-	3800	3,853	2	29,29
DOWELS & STIRUPS												
DB01	16	200	SEE DWG	7850	-	-	-	-	7850	1,578	12	148,68
DB02	16	200	SEE DWG	7450	-	-	-	-	7450	1,578	2	23,52
DB03	16	200	SEE DWG	7580	-	-	-	-	7580	1,578	2	23,93
DB04	16	200	SEE DWG	6880	-	-	-	-	6880	1,578	4	43,44
BARS RECAP												
	12								169,56	0,888		150,54
	16								180,86	1,578		285,46
	20								0,00	2,466		0,00
	25								21,20	3,853		81,69
											TOTAL:	517,69

BAR SHAPES

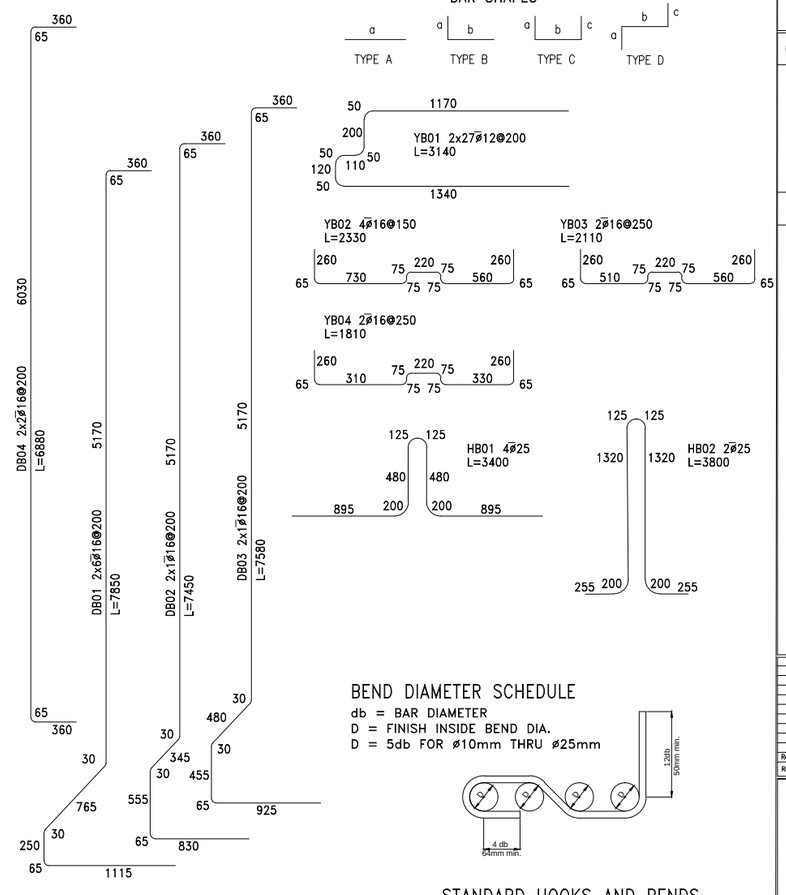

BEND DIAMETER SCHEDULE

db = BAR DIAMETER
D = FINISH INSIDE BEND DIA.
D = 5db FOR ø10mm THRU ø25mm

STANDARD HOOKS AND BENDS

CONCRETE COVER ACC. TO LOCATION OF BARS	MIN. COVER (mm)
T–WALLS	40

GENERAL NOTES

(UNLESS NOTED OTHERWISE)

1. DIMENSIONS ARE (mm)
2. CONCRETE COVER ACCORDING TO THE ENCLOSED TABLE U.N.O.
3. THE COMPRESSIVE STRENGTH OF CONCRETE IS 25 MPa AFTER 28 DAYS
4. THE YIELD STRENGTH OF STEEL IS 420 MPa

0 500 1000 2500
1:25

United States Department of State
Office of Overseas Buildings Operations
Washington, D.C.

U.S. EMBASSY BAGHDAD

BAGHDAD, IRAQ

GENERAL NOTES

KEYNOTES

Rev Number	Description	Date
–	–	–

Revisions

Release For Construction:

Drawing Title
T-WALLS
TYPE I REINFORCEMENT PLAN

Project Number	Drawing Scale 1:25	Phase ☒ IDDS ☐ IFC ☐ OTHER:
CADD File Name –	CADD Plot Scale 1:1	

Date 18–07–25
Drawn By E.DZABIC
Checked By M.CIL
Project No.: XXXXX
Sheet Number SD-012
Classification SENSITIVE BUT UNCLASSIFIED

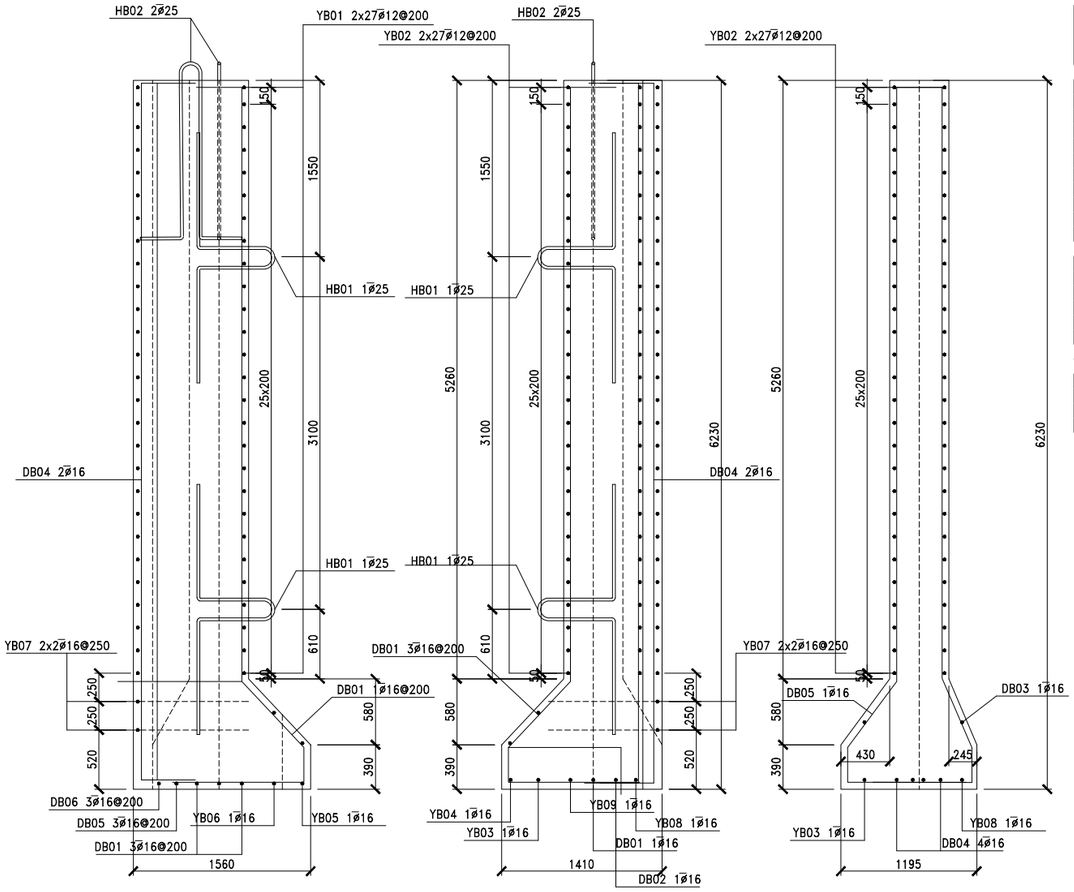

SECTION 1–1 SECTION 2–2 SECTION 3–3

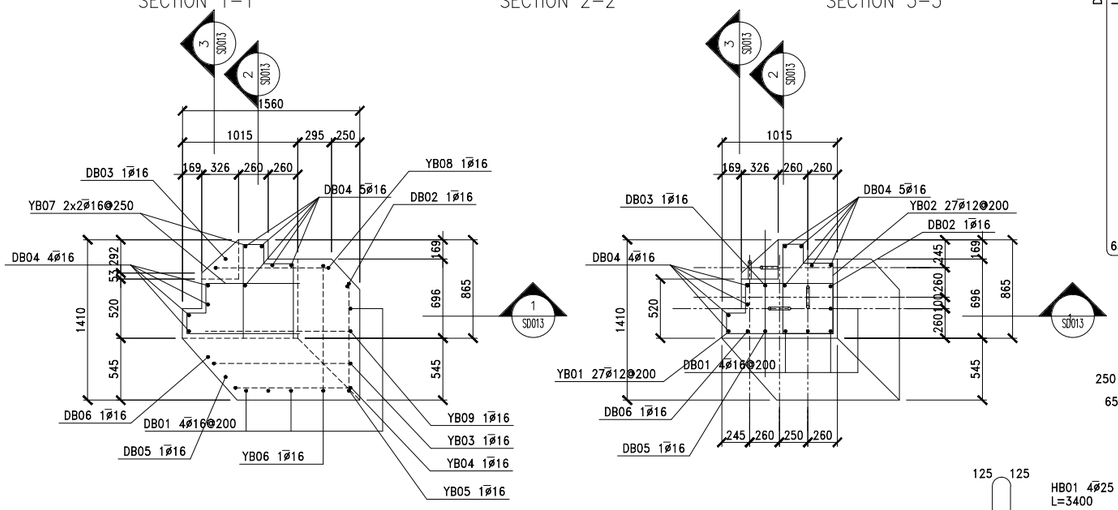

1 SD013 T–WALL TYPE 2 – REINFORCEMENT PLANS

SD013 SCALE: 1:25

Mark	Bar Size (mm)	Spacing (mm)	Type	Mark a	b	c	d	e	Length (mm)	Weight (kg/m)	Quantity (no)	Total Weight (kg)
LONG REINFORCEMENT												
YB01	12	200	SEE DWG	2890	-	-	-	-	2890	0,888	27	69,28
YB02	12	200	SEE DWG	2590	-	-	-	-	2590	0,888	27	62,08
YB03	16	250	SEE DWG	3610	-	-	-	-	3610	1,578	1	5,70
YB04	16	250	SEE DWG	2740	-	-	-	-	2740	1,578	1	4,32
YB05	16	250	SEE DWG	2540	-	-	-	-	2540	1,578	1	4,01
YB06	16	250	SEE DWG	3370	-	-	-	-	3370	1,578	1	5,32
YB07	16	250	SEE DWG	2840	-	-	-	-	2840	1,578	4	17,93
YB08	16	250	SEE DWG	3620	-	-	-	-	3620	1,578	1	5,71
YB09	16	250	SEE DWG	4490	-	-	-	-	4490	1,578	1	7,09
HB01	25	N/A	SEE DWG	3400	-	-	-	-	3400	3,853	4	52,41
HB02	25	N/A	SEE DWG	3800	-	-	-	-	3800	3,853	2	29,29
DOWELS & STIRUPS												
DB01	16	200	SEE DWG	7850	-	-	-	-	7850	1,578	4	49,56
DB02	16	200	SEE DWG	7830	-	-	-	-	7830	1,578	1	12,36
DB03	16	200	SEE DWG	7740	-	-	-	-	7740	1,578	1	12,22
DB04	16	200	SEE DWG	6880	-	-	-	-	6880	1,578	9	97,73
DB05	16	200	SEE DWG	7790	-	-	-	-	7790	1,578	1	12,30
DB06	16	200	SEE DWG	7280	-	-	-	-	7280	1,578	1	11,49

BARS RECAP												
	12								147,96	0,888		131,36
	16								155,69	1,578		245,73
	20								0,00	2,466		0,00
	25								21,20	3,853		81,69
											TOTAL:	458,78

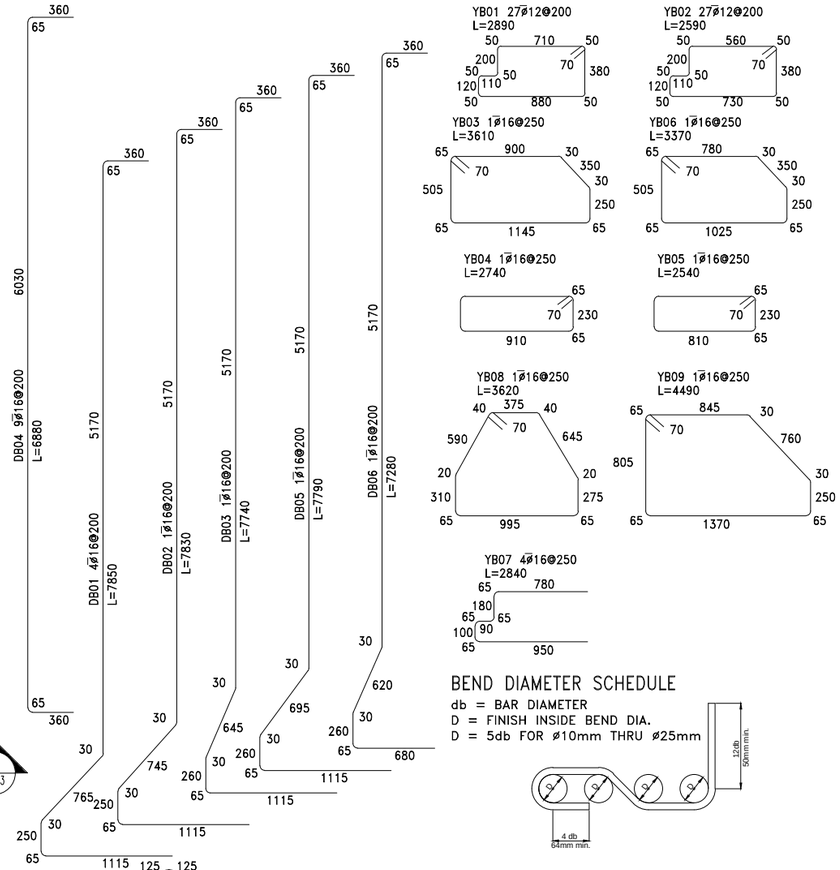

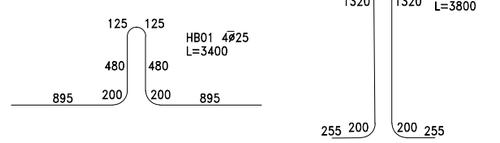

BEND DIAMETER SCHEDULE

db = BAR DIAMETER
D = FINISH INSIDE BEND DIA.
D = 5db FOR ø10mm THRU ø25mm

STANDARD HOOKS AND BENDS

GENERAL NOTES

(UNLESS NOTED OTHERWISE)

1. DIMENSIONS ARE (mm)
2. CONCRETE COVER ACCORDING TO THE ENCLOSED TABLE U.N.O.
3. THE COMPRESSIVE STRENGTH OF CONCRETE IS 25 MPa AFTER 28 DAYS
4. THE YIELD STRENGTH OF STEEL IS 420 MPa

CONCRETE COVER ACC. TO LOCATION OF BARS	MIN. COVER (mm)
T–WALLS	40

0 500 1000 2500
1:25

United States Department of State
Office of Overseas Buildings Operations
Washington, D.C.

U.S. EMBASSY BAGHDAD

BAGHDAD, IRAQ

GENERAL NOTES

KEYNOTES

Rev Number	Description	Date
–	–	–

Revisions

Release For Construction:

Drawing Title
T-WALLS
TYPE 2 REINFORCEMENT PLAN

Project Number	Drawing Scale	Phase
–	1:25	☒ 100% ☐ IFC
CADD File Name	CADD Plot Scale	☐ OTHER:
–	1:1	

Date 18–07–25
Drawn By E.DZABIC
Checked By M.CIL
Project No.: XXXXX
Sheet Number SD-013
Classification SENSITIVE BUT UNCLASSIFIED